Trailgate 25 is designed to fit many smaller SUVs and wagons. Here are the key points to check in your vehicle to evaluate compatibility.

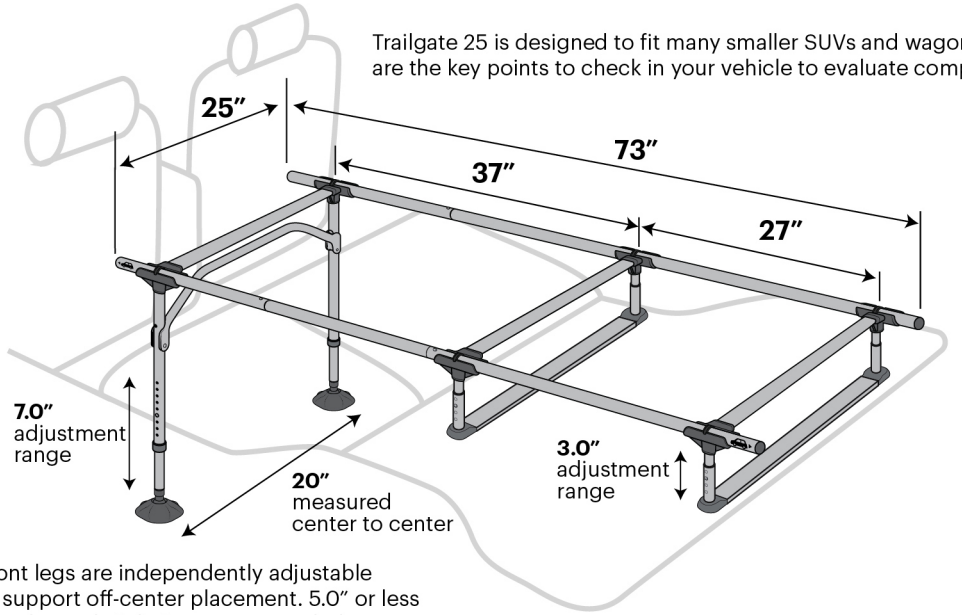

Front legs are independently adjustable to support off-center placement. 5.0″ or less floor bump height is reccommended.
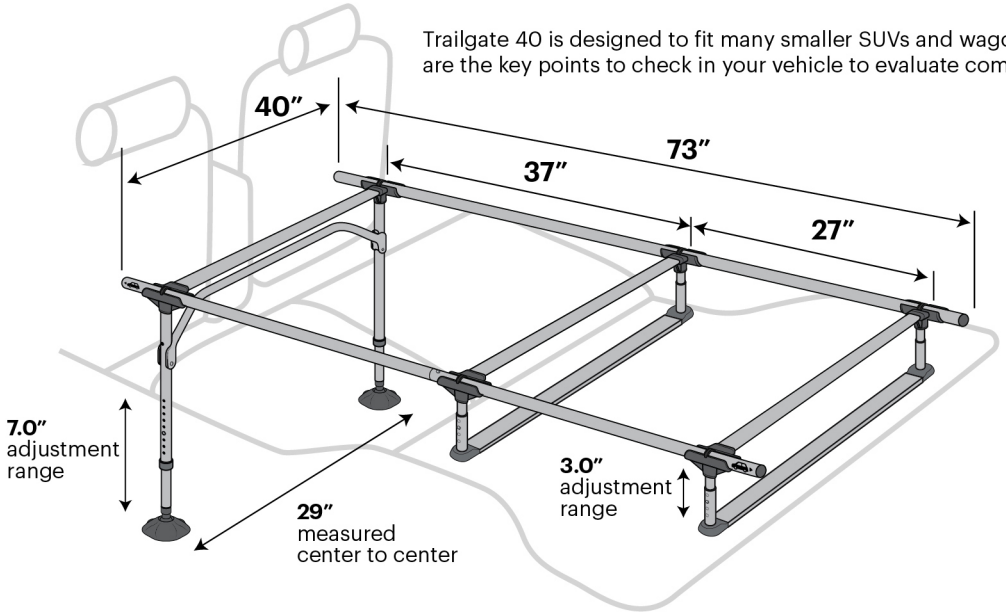
Trailgate 40 is designed to fit many smaller SUVs and wagons. Here are the key points to check in your vehicle to evaluate compatibility.